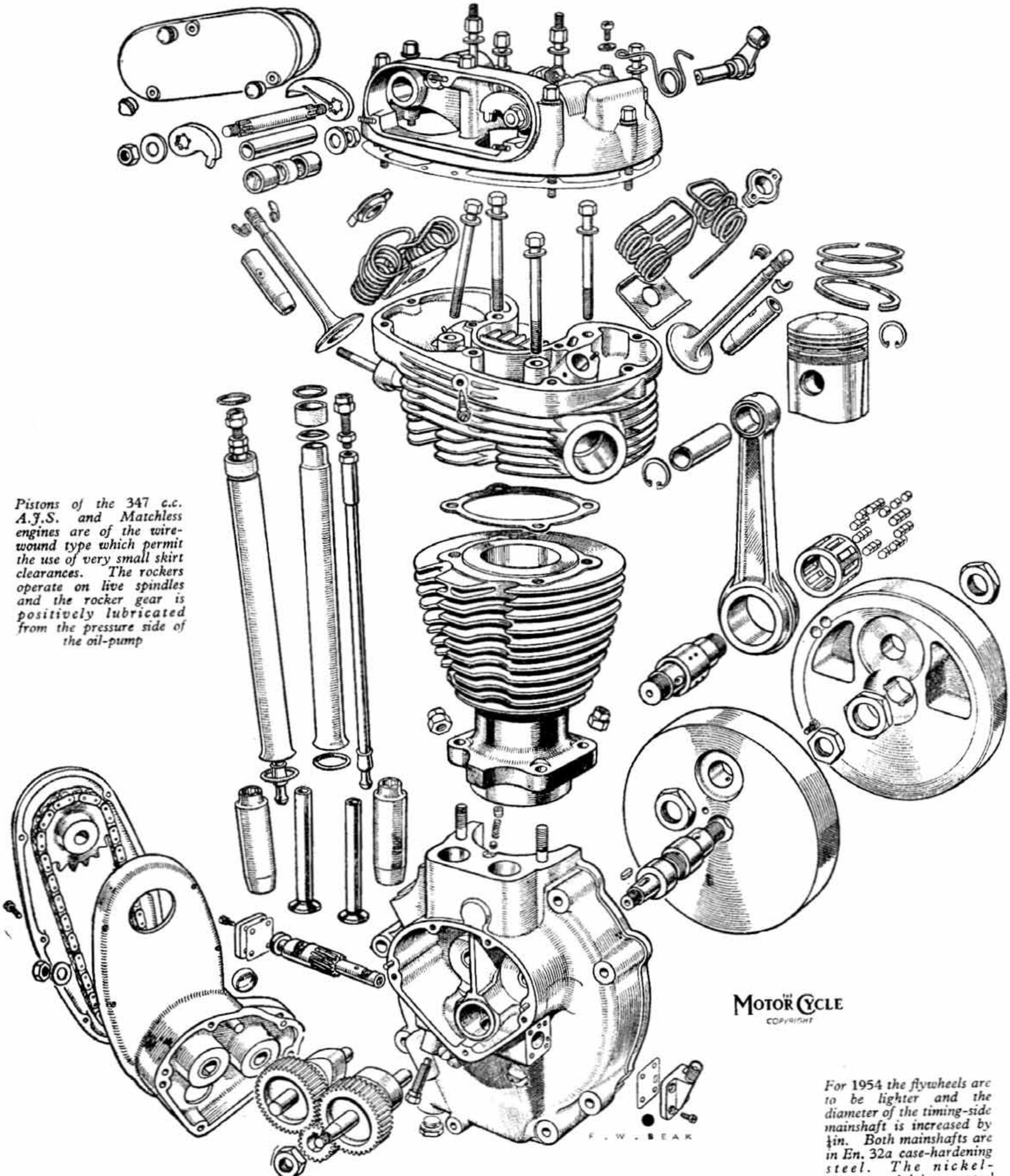

Pistons of the 347 c.c. A.J.S. and Matchless engines are of the wire-wound type which permit the use of very small skirt clearances. The rockers operate on live spindles and the rocker gear is positively lubricated from the pressure side of the oil-pump

For 1954 the flywheels are to be lighter and the diameter of the timing-side mainshaft is increased by ⅛in. Both mainshafts are in En. 32a case-hardening steel. The nickel-chrome-molybdenum steel crankpin carries a roller track in chromium case-hardening steel

347 c.c. A.J.S. and Matchless

ALAN BAKER Discusses a Popular O.h.v. Engine with Designer P. A. WALKER, A.M.I.Mech.E.

A QUESTION that may well be asked when the 347 c.c. A.J.S. and Matchless engines are under discussion is whether they are, in fact, "modern engines." The basic design goes back to before the last war. The Matchless version of the engine, used in vast numbers by the Armed Forces, found favour with Don Rs practically the world over. Power output was high for a W.D. engine. The standard of mechanical quietness was the criterion by which all other engines were judged, and the degree of engine reliability was second to none.

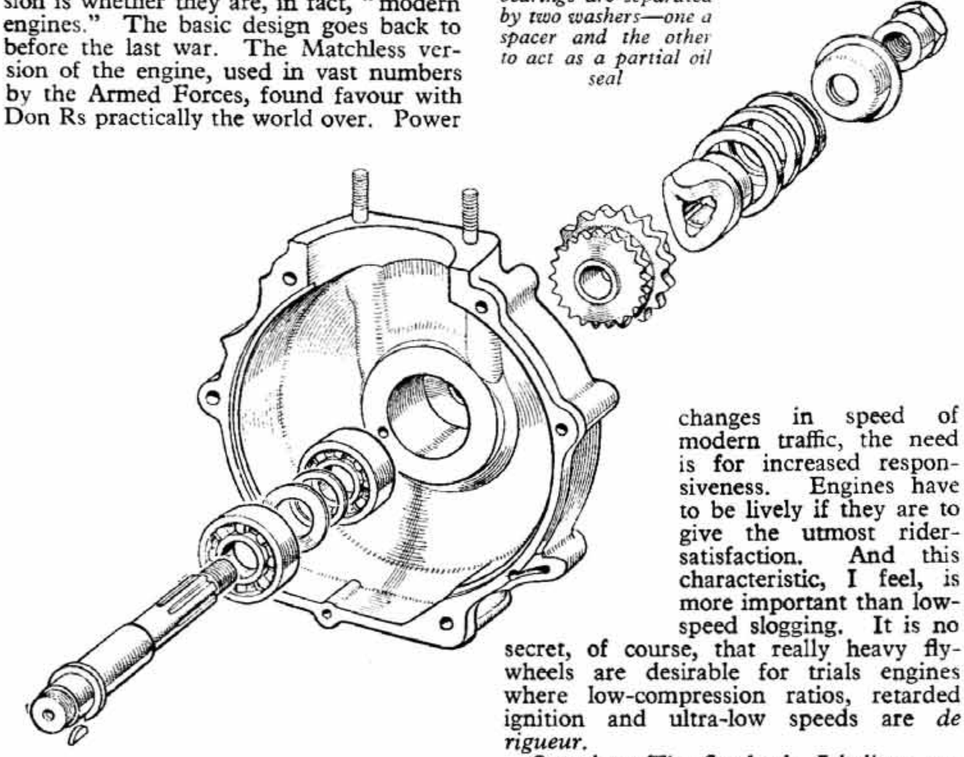
The drive-side main bearing comprises two ball races. The bearings are separated by two washers—one a spacer and the other to act as a partial oil seal

Immediately after the war the engine went into production in exactly the same form as that in which it had been manufactured for the Forces. Since then it has been modified year by year. In 1951 it was equipped with a light-alloy cylinder head and enclosed hairpin valve springs. Competition versions for trials and scrambles were introduced—engines which have been responsible for a vast number of successes both at home and abroad, in the U.S., Australia and Europe.

I called recently at the A.M.C. factory to discuss the engine with Philip Walker, the Associated Motor Cycles designer. Since I had heard rumours of certain alterations to the bottom half, I began: "For 1954 the flywheels are to be lighter by 3-4 lb a pair. Many people, myself included, believe that numerous modern machines are under-flywheeled, with the result that low-speed smoothness is not all it might be. What advantages do you gain by this apparently retrograde step?

Answer: It is true that some loss in low-speed torque is an inevitable result of lightening the flywheels. But the modern single is already extremely docile. My feeling is that, bearing in mind the rapid changes in speed of modern traffic, the need is for increased responsiveness. Engines have to be lively if they are to give the utmost rider-satisfaction. And this characteristic, I feel, is more important than low-speed slogging. It is no secret, of course, that really heavy flywheels are desirable for trials engines where low-compression ratios, retarded ignition and ultra-low speeds are *de rigueur*.

Question: The flywheels, I believe, are of high-grade cast iron with integral balance weights. What proportion of the reciprocating weight do you balance and how are the wheels balanced?

Answer: For these relatively long-stroke engines we balance 62 per cent of the reciprocating weight, and the wheels are checked singly on an Avery balancing machine which indicates where and how much weight has to be drilled out to bring the wheel up to correct balance. The drilling is done on an adjacent vertical drilling machine and the wheel returned to the Avery for recheck.

Increased Diameter

Question: Both mainshafts are of En. 32a case-hardening steel; the drive-side shaft is a parallel fit in its flywheel and it is located by two keys at 90 degrees to each other. The timing-side shaft, however, was formerly a taper fit in the wheel but, for 1954, it is to be a parallel fit with a single key, and its diameter is to be increased by ¼in. What are your reasons for the change in size and the revised method of fixing?

Answer: The change in the method of fixing the timing-side shaft has been made partly for production convenience and to take advantage of an increased shaft diameter which permits a shoulder abutment against the flywheel; this abutment provides additional support for the shaft and thus increased rigidity of the flywheel assembly results. The greater diameter provides additional bearing area to meet the increased power output.

Question: The crankpin is of nickel-chrome-molybdenum steel and has a sleeve of chromium case-hardening steel on which the rollers run. Is the sleeve a force fit on the pin and how is the oil fed to its outer surface? And what is the reason for not running the bearing directly on the crankpin?

Answer: The sleeve is a force fit on the pin and has internal grooves to carry oil to the carefully positioned holes feeding the roller bearing. The oil is initially fed into the timing-side shaft, then through the flywheel and into the crankpin, whence it passes to the grooved sleeve. As to the second part of your question, the nickel-chrome-molybdenum steel we use for the pin has a very high tensile value with good impact resistance, whereas the metal used for the hard bearing track requires relatively brittle properties.

Question: I understand that you have a system of selective fits for big-end components which ensures accuracy of the assembly within 0.0001in. Presumably the selection covers the outside diameter of the pin, the bore of the connecting-rod eye and the roller diameter. How many groups of sizes are necessary to ensure such accuracy?

Answer: We grade crankpins and connecting-rods in eight steps of one ten-thousandth part of an inch diameter, and these parts are paired to within one step up or down from the theoretically correct fit.

Longer Life

Question: The big end is unusual in that it employs three rows of ¼in × ¼in rollers, in a Duralumin cage, instead of the two rows which are more common. Why did you decide on three rows of rollers? And is your bearing appreciably wider than normal as a result?

Answer: The position is that the rate of wear is more or less related to the width of the roller track used. A wide bearing offers tremendous advantages—a fact which, indeed, has been proved to us by our experience with the racing engines. The crankpin bearing is somewhat wider than that normally used, and we have selected this arrangement, and the close control of the fit, in the interests of longevity.

Question: On the timing side, the crankshaft is supported in a phosphor-bronze bush cut away at the bottom to admit the oil-pump shaft. Why do you employ a plain bearing rather than the ball or roller pattern?

Answer: The use of a plain bearing is dictated by the method of oil transfer to the crankshaft assembly. The bush is

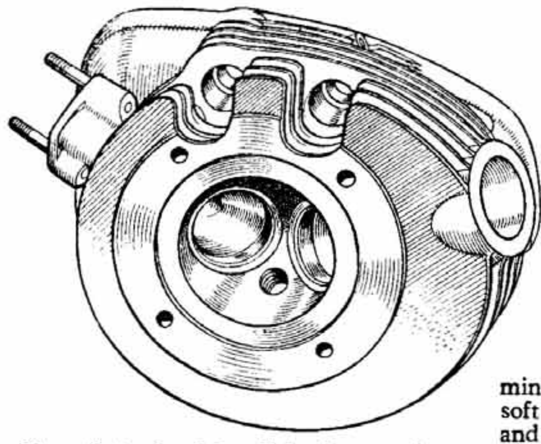

The cylinder head is a light-alloy gravity die-casting in DTD.424, with alloy-iron valve-seat inserts

heavily shouldered at the flywheel end to permit the use of a tight fit at this point, since a tight fit is impossible where the bush is cut away.

Question: The timing gears have live spindles which run in bushes in the crankcase and timing-case cover. How do you ensure the accurate location of the gears which is so essential for silent operation ?

Answer : Gear-tooth pitch-line diameter is accurately controlled during manufacture, and the crankcases are fine-bored in a special machine installed to ensure an accuracy of gear centres within 0.0001in, which we have found essential. Even then, selective assembly of gearing is resorted to whenever a machine fails to achieve the standard degree of quietness.

Question: Cast iron is used for the tappet guides, which have a series of axial grooves to pass the surplus oil from the valve gear; is there any provision for positive rotation of the tappets, to spread the wear ?

Answer: Yes, the tappets are automatically rotated by virtue of an offset between the cam path and the centre line of the tappet.

Mechanical Quietness

Question: The DTD.424 light-alloy cylinder head is a very handsome gravity die-casting with cast-in alloy-iron valve-seat inserts. Why was this material chosen for the inserts, and how do you ensure that they do not work loose ?

Answer: For use in a touring engine, where long life of engine components is of the greatest importance, an alloy-iron for valve seats cannot be bettered. It is true that aluminium-bronze seats, as used in racing engines, provide better heat conductivity but they have a very short life—a factor which is unimportant in an engine built for sheer power output (and reliability over a short period).

Question: One or two firms have found mechanical noise troublesome with light-alloy cylinder heads, yet your engines are famous for their quietness. What is the secret of your success ?

Answer: The quietness results from good workmanship, careful design of cam gear and correct selection of materials for the different components. There is no secret about this ! The cam profile ensures quiet mechanical operation of the valve. The cam pinions are wide to ensure long life. The timing pinion is manufactured from oil-hardened steel. Because of its toughness, an oil-hardened pinion possesses certain shock-absorbent qualities and, in addition, it has high distortion-resisting properties. The cam wheels are case-hardened.

Question: The rockers are not carried in the head but in the aluminium rocker box, and a fairly thick and soft gasket is fitted between the rocker box and head. In view of the zero tappet clearance, I should have thought that a metal-to-metal joint, sealed by jointing compound, would eliminate the danger of the exhaust valve being raised off its seat by bedding down of the gasket. Would you care to comment on this point?

Answer: This is a case where theory and practice are not compatible. All I can say is that the desired results are obtained without causing additional maintenance work. It must be pointed out that there is a very large surface area of gasket to take the loading applied and, with the correct material for the gasket, very little bedding down takes place.

Question: The rockers comprise separate arms splined on a spindle and clamped by nuts to a spacer sleeve which forms the bearing surface. The rocker shafts are thus live and run in bronze bushes in the rocker box. Why do you prefer this construction to the more common arrangement of a bushed rocker with integral arms running on a fixed spindle ?

Rocker Gear Design

Answer: The selection of the whole rocker gear design is dictated by economic and functional requirements. The system provides a substantial bearing area; it is convenient from a production viewpoint and production costs are not excessively high. The advantage of mounting the rocker spindles in the rocker-box covers is that during dismantling the rocker box can be removed complete with the rockers.

Question : The shape of the two rocker arms is almost identical, though one has a machined ball end and the other a thickened-up end to bear on the valve stem. Do you use the same stamping for each or are they separate components?

Answer : The same blank is used for each arm; the pad on the arm at the valve end of the spindle is "upset" in a press tool to provide the necessary width of pad.

Question : The valve guides, I note, have no flanges for location purposes. How do you ensure that they are inserted to the correct depth and have they any tendency to shift owing to their lower rate of expansion than that of the cylinder head?

Answer : Stepped assembly tools are provided for positioning the guides, which are of a type we have used for many years. I agree that a positive location would ensure immobility of the guide, but trouble with our design over the years has been negligible and a flanged guide would add to the cost.

Flame Hardened

Question : There are no caps on the valve-stem ends, but the exhaust valve-stem tip is flame hardened to resist hammering. What is the increase in hardness obtained by the flame-hardening? And why do you prefer hardening the stem to using a hardened cap?

Answer : The hardness is increased from 250 to 720 Vickers Pyramid Numeral, which is approximately the hardness obtained on some alloy case-hardened steels. The reason for not using hardened end-caps is that should the least trace of valve-sticking occur, or the valves float (in the event of the rider missing a gear), the cap jumps off the valve stem. The inevitable result of such an occurrence is too obvious to require discussion!

Question : I note that you use multi-groove valve cotters. What advantages have they over the more conventional pattern with a single, deeper groove?

TECHNICAL DATA

CAPACITY : 347 c.c.

BORE : 69 mm.

STROKE : 93 mm.

COMPRESSION RATIO : Standard, 6.53 to 1. Competition, 7.5 or 9.42 to 1.

PISTON RING END-GAP : Normal, 0.006in ; maximum, 0.030in.

PISTON RING SIDE-CLEARANCE : 0.002in.

PISTON CLEARANCES : Top land, 0.032-0.034in ; at wire winding, 0.001in ; bottom of skirt, 0.0005in.

TAPPET CLEARANCE : Nil, with engine warm (not hot).

VALVE TIMING : Standard engine (with 0.014in tappet clearance) : inlet valve opens 36 degress before top dead centre and closes 51 degrees after bottom dead centre : exhaust valve opens 50 degrees before b.d.c. and closes 30 degrees after t.d.c. Scrambles engine (with 0.001in clearance) : inlet valve opens 59 degrees before t.d.c. and closes 69 degrees after b.d.c. ; exhaust valve (with 0.005in clearance) opens 74 degrees before b.d.c. and closes 48 degrees after t.d.c.

IGNITION TIMING : Standard and trials engines : On full advance, contact-breaker points begin to separate 37 degrees of crankshaft rotation before t.d.c. Scrambles engine : 39 degrees before t.d.c.

ENGINE DIMENSIONS : Crankshaft drive-side ball bearings, 1in bore x 2.25in outside diameter x 0.625in wide. Timing-side bush, 1.125in bore (+0.000-0.0005in) x 1.547in long. Crankpin, 1.20375-1.2035in diameter x 0.946-0.944in long. Small-end bush, $\frac{7}{8}$in bore (±0.00025in) x $1\frac{1}{16}$in long. Connecting rod length, big-end to small-end centres, $6\frac{7}{8}$in. Valve head diameters : inlet, 1.594in ; exhaust, 1.50in. Valve stem diameters : inlet, 0.373-0.372in ; exhaust, 0.3715-0.3705in. Valve seat angle, 45 degrees. Valve lift, 0.358in (standard cams).

CARBURETTOR : Amal Type 76AV/1.E.D. with 3 degrees of downdraught ; 150 main jet, 6/4 throttle slide, throttle needle clip in middle notch (if air cleaner fitted, 130 main jet and needle one notch lower).

Answer: The multi-groove arrangement is one we have used for a number of years. It is particularly suited to the softer valve steels, of which Silchrome is one, by virtue of the increased shoulder area which it provides.

Question: Overlapping hairpin valve springs were introduced concurrently with the light-alloy cylinder head. In what way are such springs superior to coil springs for an engine of this type, and how do you stop them from rotating?

Answer: As compared with coil springs, hairpin valve springs are less likely to deteriorate in tension, as they are remote from the valve guides which, particularly in the case of the exhaust, can become hot enough to blue helical valve springs and cause them to lose length. The seating for the hairpin springs is pegged to stop it turning.

Question: Earlier engines had the exhaust-valve lifter mounted in the timing case, where it operated on the exhaust tappet. With the introduction of the alloy head, the valve lifter was moved to the normal position in the rocker box. Can you tell me the reason for this change?

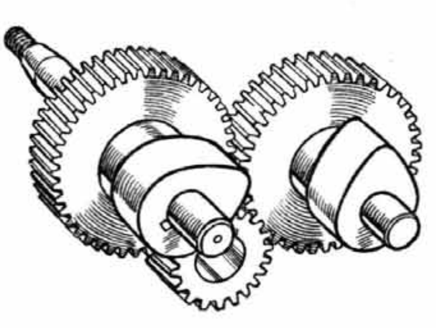

The new cams provide greater lift, increased overlap and less dwell. The crankshaft pinion is manufactured in oil-hardening steel, a material which has high distortion-resisting properties

Answer: There were two reasons for the alteration in design. First, the appearance of the engine was improved by the removal of the operating cable to a less conspicuous position. Secondly, we were able to simplify the tappet and guide assembly.

Question: The standard engine has a cast-iron cylinder barrel held down by short studs passing through the base flange only. In the competition engines, a linered light-alloy barrel is employed, and it is secured to the crankcase by long studs passing through the head. What is the reason for the different construction on the two engines?

Answer: The long studs are used on the competition models as the light-alloy linered barrel is unsuitable as a tension member. Apart from this, there is little space for cylinder-base stud nuts, since the cylinder material at the base is thicker than it is in the case of the iron cylinder.

Question: The wire-wound pistons you employ are unusual. What is the purpose behind this particular feature?

Answer: The wire is a normal medium-carbon steel and five turns are used; it is wound into a spiral groove under a carefully regulated tension and ground overall when the piston diameter is finished. The winding enables the thermal expansion of the piston to be carefully controlled, thus permitting the use of very small clearances.

Question: Selective assembly of barrels and pistons ensures a high accuracy of fit. How many groups are there and what are the intervals between the groups?

Answer: Eleven size groups are available in steps of 0.00025in.

Question: The top piston ring is chromium-plated. I understand that this simple modification has greatly reduced the rate of bore wear. A difficulty with earlier chrome-plated rings was that they bedded down very slowly, owing to the hardness of the chromium. Has your ring any feature to eliminate this bother?

Answer: Yes, the outside diameter of the ring is slightly tapered to ensure rapid bedding down.

Question: Main and big-end bearings are fed directly from the delivery side of the rotary-plunger pump. There is also a feed to the cylinder bore at two points via a drillway from the pump housing, a spring-loaded ball valve and a peripheral groove on the lower face of the cylinder base flange. Am I right in assuming that the loading on the ball valve is such as to pass a fair supply when the oil is cold and very little when it is hot (in which latter circumstances the splash from the big end is greater)?

Timing Gear Lubrication

Answer: That is correct. There is some resistance to flow from the big end with cold oil, owing to the outlet holes pointing towards the crankshaft centre; this resistance is sufficient to overload the ball-valve spring at low engine revs and to allow a quantity of oil to reach the cylinder walls.

Question: The rocker gear is lubricated from the pressure side of the oil pump and not from the scavenge side, as is more commonly the case. I note also that the timing gears and cams are lubricated by surplus oil which drains down the push-rod cover tubes from the rocker gear. Is there any connection between these two features?

Answer: Yes, there is a close connection. Since the timing gear is lubricated by oil draining from the rocker gear, it is better to use cool oil from the pressure side of the pump to feed to the rocker gear. A further reason for using fresh oil is to ensure controllability of the feed by the various jets and restrictions used throughout the rocker gear lubrication channels.

Question: Is there any form of positive lubrication for the exhaust valve guide or do you avoid this because of the risk of carbon formation on the stem and consequent sticking?

Answer: The exhaust valve guide receives a slight wetting, as oil is caught in a suitable well in the top face of the cylinder head and drains past a hole in the valve guide. Some oil can reach the valve stem but there is never a head of oil to over-lubricate the valve.

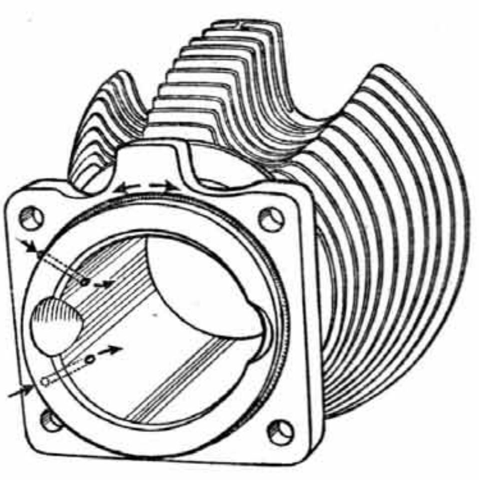

Cylinder bore lubrication is by oil forced under pressure from the oil pump into a peripheral groove in the base of the cylinder. From here it is fed to the thrust face through oilways drilled in the cylinder walls

Question: Are the competition engines tuned in any way, such as by polishing flywheels, head and ports?

Answer: No special finish is applied to the components because a reasonable degree of attention is paid to the inlet and exhaust ports on all models; only the few really top-line riders would derive any notable advantage from a high degree of polishing—a very costly process.

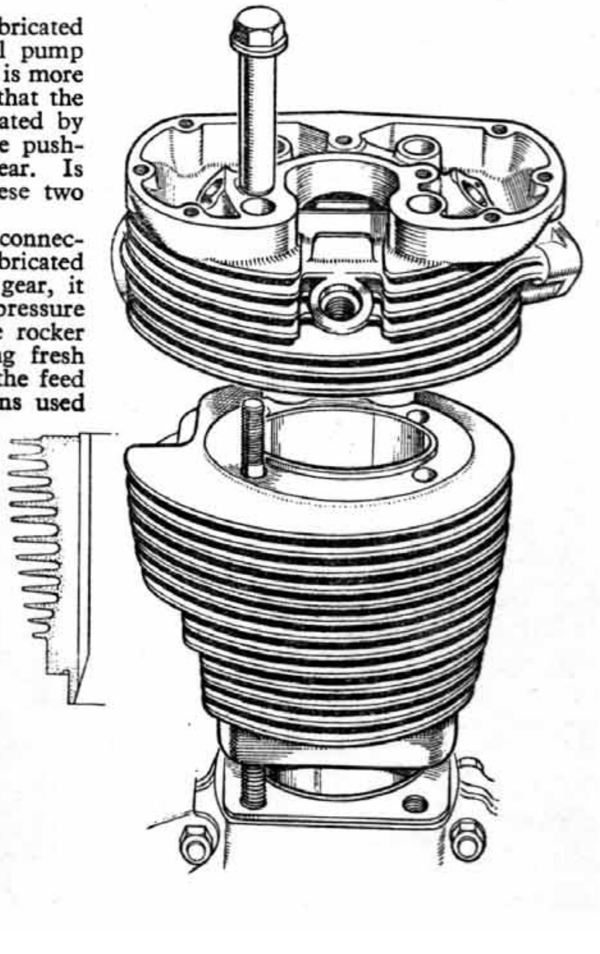

The 347 c.c. light-alloy competition engine was introduced in 1949 for production in 1950. Both cylinder and head are retained by four high-tensile steel studs, protruding from the crankcase cylinder-joint face and passing through the cylinder-barrel casting